WOOFER

4 AR 160

Woofer with exceptional extended response range, 85~20 kHz. Recommended for countless applications, professional, residential, commercial and automotive. It is now widely used in voice columns in various segments. The 4 AR 160, has a radial diffuser, allowing excellent elevation and high frequency performance, where it is not necessary to use a tweeter. The 4 AR 160 supports up to 160 watts of program power and 80 watts continuous. Speaker designed to surprise expectations that cherish quality and technical excellence. Visit Oversound.com.br, see this and other products that fit perfectly into your design.



SPECIFICATIONS *⑤

NOMINAL DIAMETER:	4 Inches
NOMINAL IMPEDANCE:	8 Ω
MINIMUM IMPEDANCE:	6.6 Ω
RATING POWER * ①:	80 w
PROGRAM POWER * ② :	160 w
SENSITIVITY * ③ :	85.3 dB
FREQUENCY RANGE:	85~20 kHz
COIL DIAMETER:	26 MM
COIL WIRE:	CCAW
FORMER MATERIAL:	KAPTON
WINDING DEPTH (HVC):	5.2 MM
MAGNETIC GAP DEPTH (HAG):	5.0 MM
VOLUME OCCUPIED (SPEAKER):	0.20 L

TS PARAMETERS *④

RESONANCE FREQUENCY:	Fs	120 Hz
COIL RESISTANCE:	Re	5.0 Ω
ELECTRICAL QUALITY FACTOR:	Qes	1.67
MECHANICS QUALITY FACTOR:	Qms	4.3
TOTAL QUALITY FACTOR:	Qts	1.2
EQUIVALENT VOLUME:	Vas	1.6 L
CONE EFFECTIVE AREA:	Sd	56 cm^2
REFERENCE EFFICIENCY:	No	0.16 %
MAXIMUM DISPLACEMENT:	Xmax	1.30 mm
MAXIMUM PEAK BEFORE DAMAGE:	Xlim	3 mm
MOVABLE MASS:	Mms	4.7 g
INDUCTANCE:	Le	0.21 mH
BL:		3.5 T-m

MATERIALS

MAGNET:	BARIUM FERRITE
FRAME:	STEEL
CONE:	CELLULOSE
SUSPENSION:	FOAM

RESPONSE CURVE *⑥

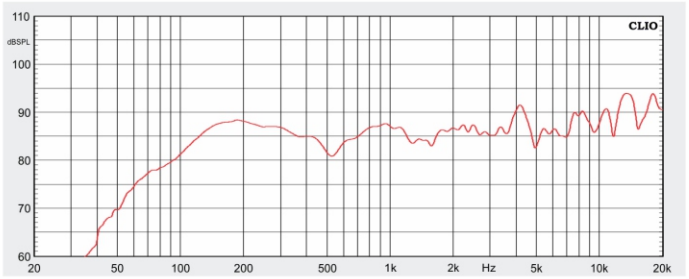

IMPEDANCE

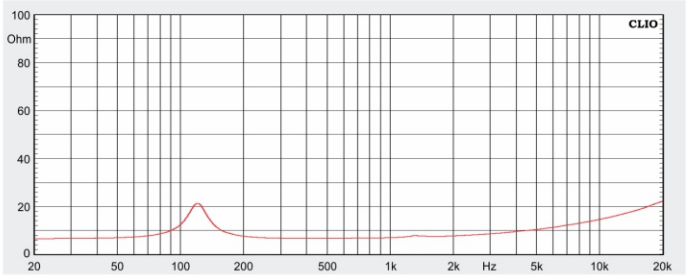

DIMENSIONS

PACKING:	154 x 140 x 73 mm
GROSS WEIGHT:	0.81 Kg
NET WEIGHT:	0.90 Kg

* MESURES IN MILIMETERS.

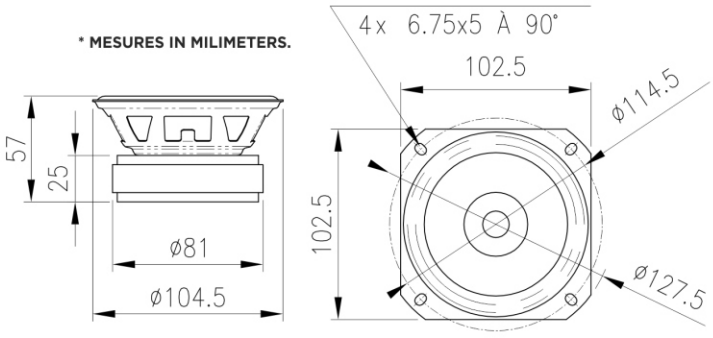

① 2 hour test done with continuous pink noise (crest factor of 6 dB) in the specific range and calculated power over the minimum impedance in the open air.

② Program power set at 3 dB above nominal specification.

③ 2.83 V. RMS.

④ Softened for 2 hours at 15 Hz at high level. Performed at 26.8°C, relative humidity at 71% and atmospheric pressure at 1012.2 mbar.

⑤ Specifications and design subject to change without prior notice, in accordance with the technological evolution of the product.

⑥ Infinite baffle, smoothing 1/12 octave.

SPEAKERS OVERSOUND

NR 15 Annex 1: Exposure to noise above the specified limits by the Standard may cause hearing loss or damage. OVERSOUND is not responsible for the improper use of its products (ordinance 3214/78). According to FEDERAL LAW n° 11.191/06, we report that damage to hearing exposed to power above 85 decibels may occur.